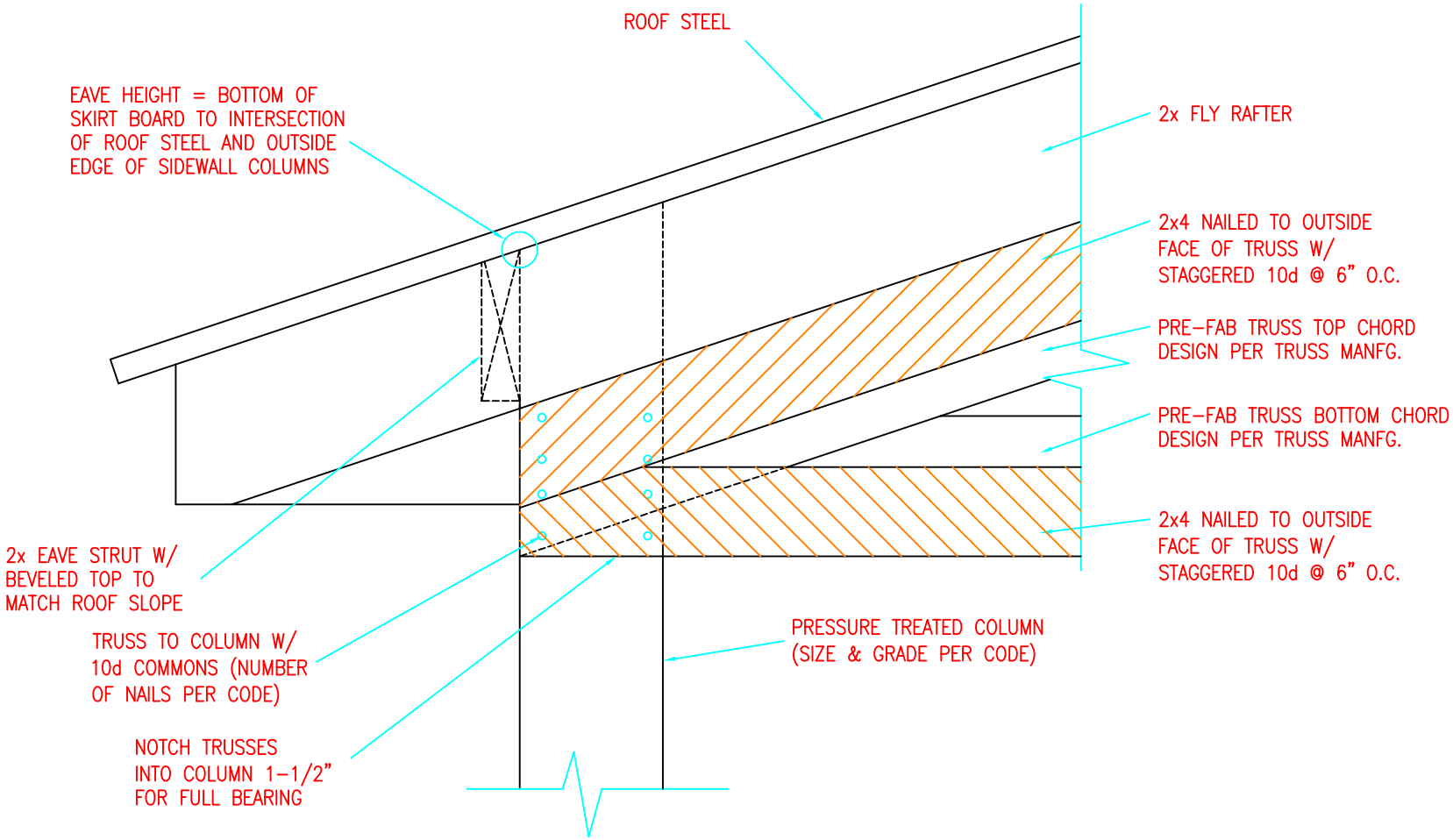


8 / S-4

# END TRUSS TO CORNER COLUMN